SM 2862-5255

SANYO DENKI
SANMOTION

Dimensions (Unit:mm)

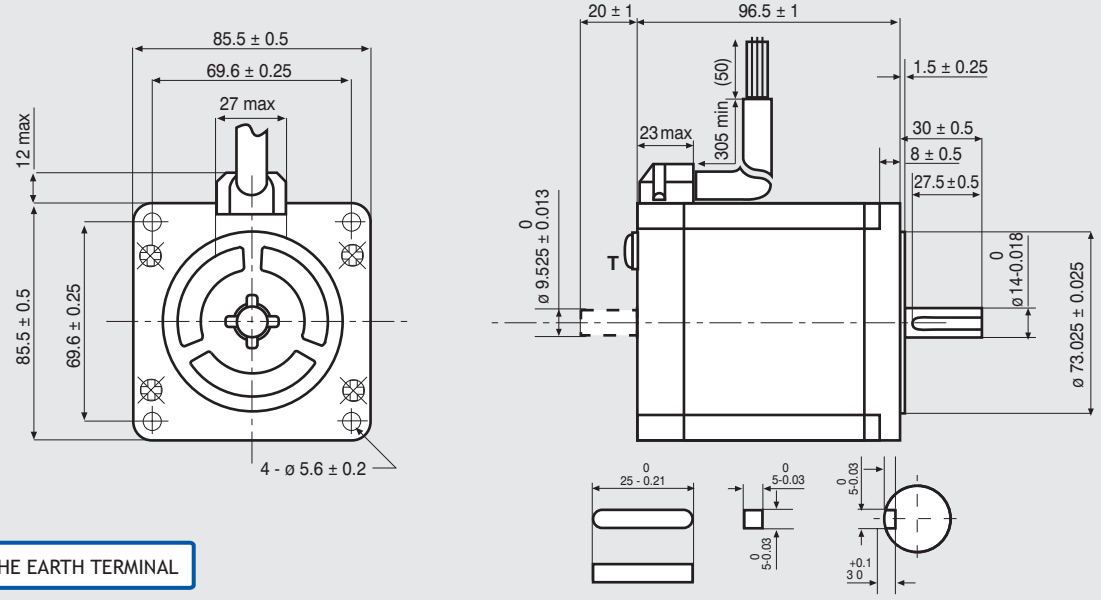

T IS THE EARTH TERMINAL

FEATURES

MODEL		SM 2862-5255 (SM 2862-5225)
BASIC STEP ANGLE		1.8° ± 0.09°
BIPOLAR CURRENT	(Amp)	6.0
RESISTANCE	(Ohm)	0.36
INDUCTANCE	(mH)	2.8
BIPOLAR HOLDING TORQUE	(Ncm)	700
ROTOR INERTIA	(Kgm ^{2} x 10 $^{-7}$)	3000
THEORETICAL ACCELERATION	(rad x sec.$^{-2}$)	23300
BACK E.M.F.	(V/Krpm)	120
MASS	(Kg)	2.9
INTERNATIONAL STANDARDS		UL, CSA
INSULATION VOLTAGE	(V)	250 VAC (350 VDC)
PROTECTION DEGREE		IP43-F
LEADS CODE		V

Codes between brackets refer to double shaft models.
Le sigle fra parentesi si riferiscono ai modelli bialbero.

TORQUE/SPEED CURVE

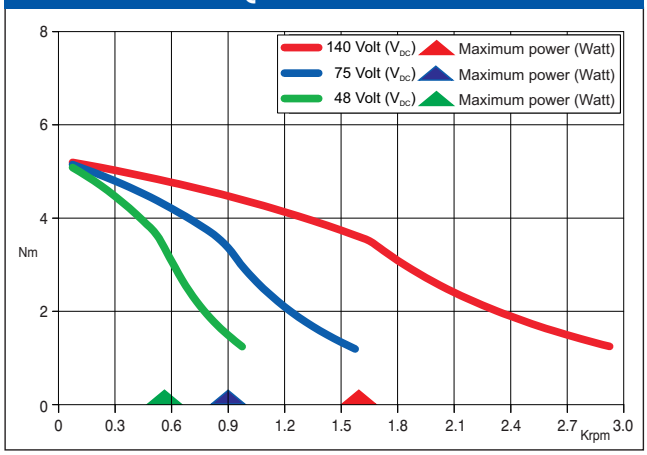

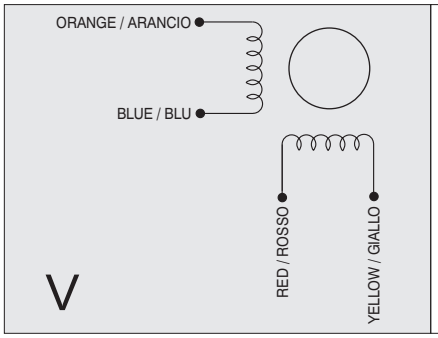

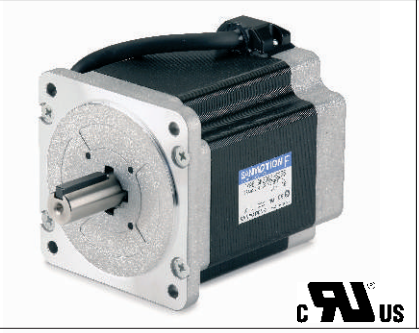

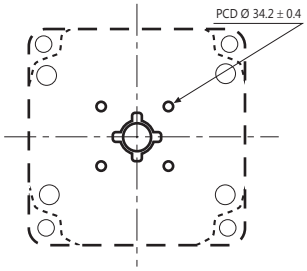

DOUBLE SHAFT MOTORS ONLY.
4 X M4 THREATED HOLES. TAP DEPTH 4.5 mm.

R.T.A. s.r.l. PAVIA (ITALY) SANYO DENKI CO.,Ltd (JAPAN)
EIMC - 10 - 14

Suggested R.T.A. driver: NDC/A-NDC Series, ADW Series, HGD Series, PLUS Series.

R.T.A. s.r.l.
Via E. Mattei - Fraz. Divisa
27020 MARCIGNAGO (PV) ITALY
Tel. +39.0382.929.855 - Fax +39.0382.929.150
www.rta.it

R.T.A. Deutschland GmbH
Bublitzer Straße 34
40599 DÜSSELDORF (Germany)
Tel. +49.211.749.668.60 - Fax +49.211.749.668.66
www.rta-deutschland.de

R.T.A. IBERICA-Motion Control Systems S.L.
C/Generalitat 22, 1° 3°
08850 GAVA - BARCELONA (Spain)
Tel. +34.936.388.805 - Fax +34.936.334.595
www.rta-iberica.es